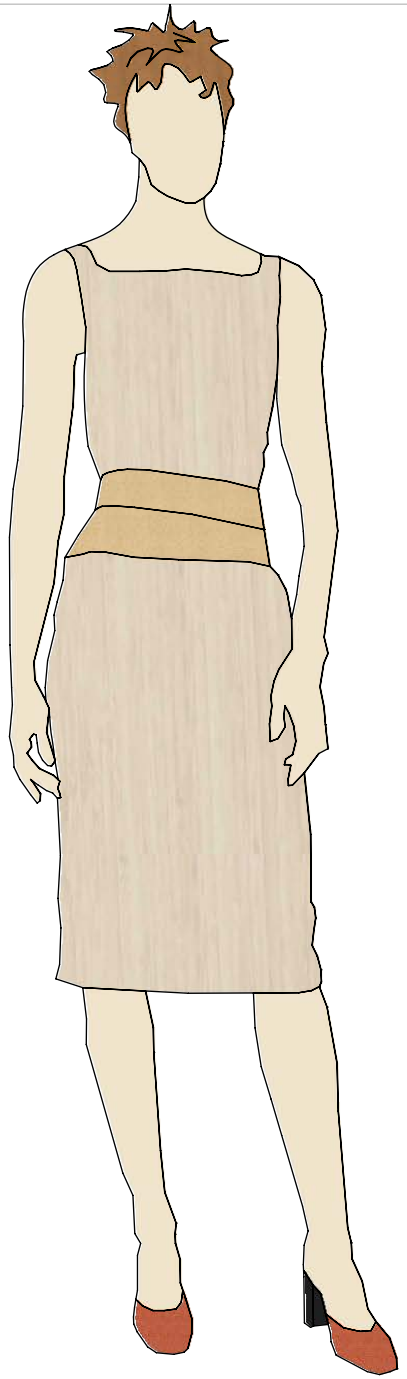

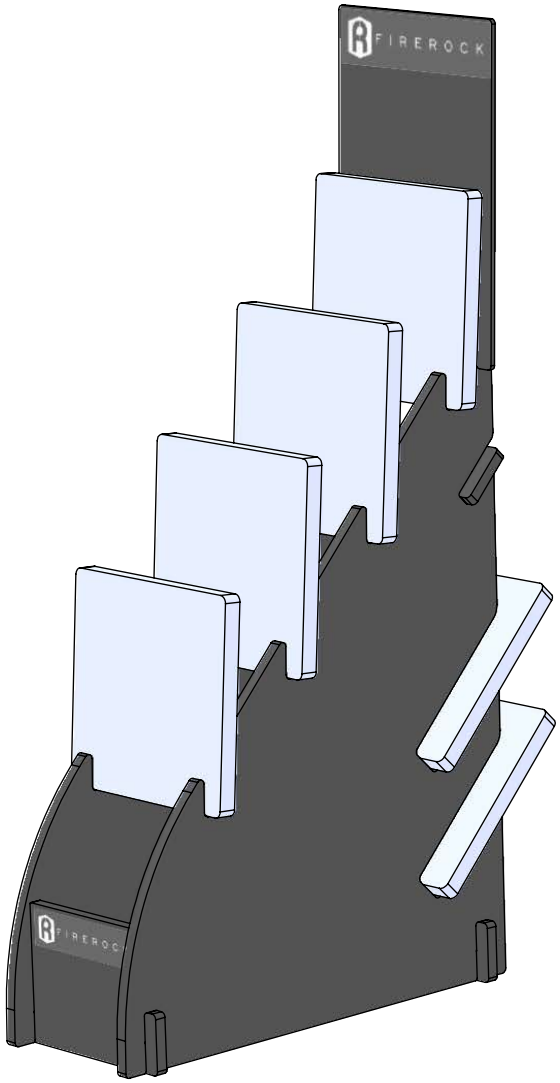

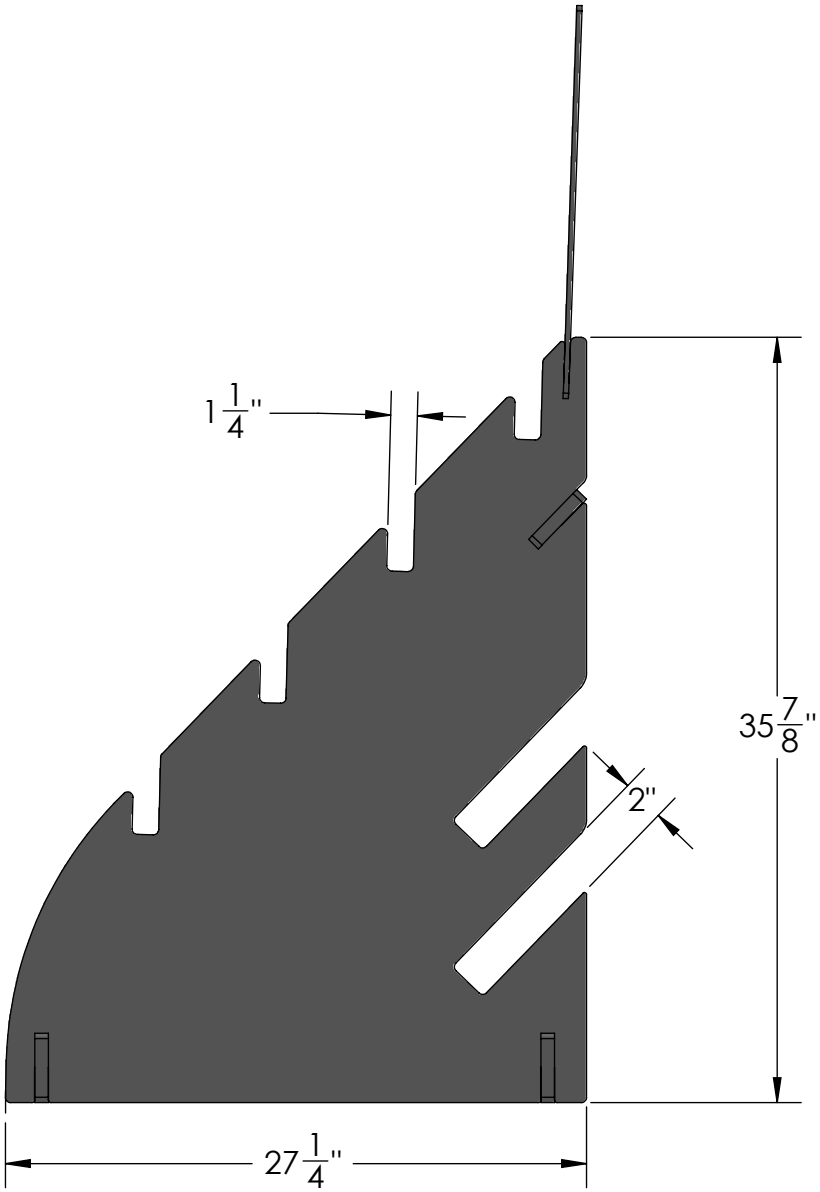

Back

THOMAS RECOM
THE THOMAS RESEARCH COMPANY INC.
1-800-973-2660 WWW.ThomasRECOM.COM

DESC.: 4-COUNT, 1-1/8" SLOTS, WITH HEADER	PART#: 926	DATE: 3-4-19	SHEET 1 OF 2

SLOTS
1-1/4"

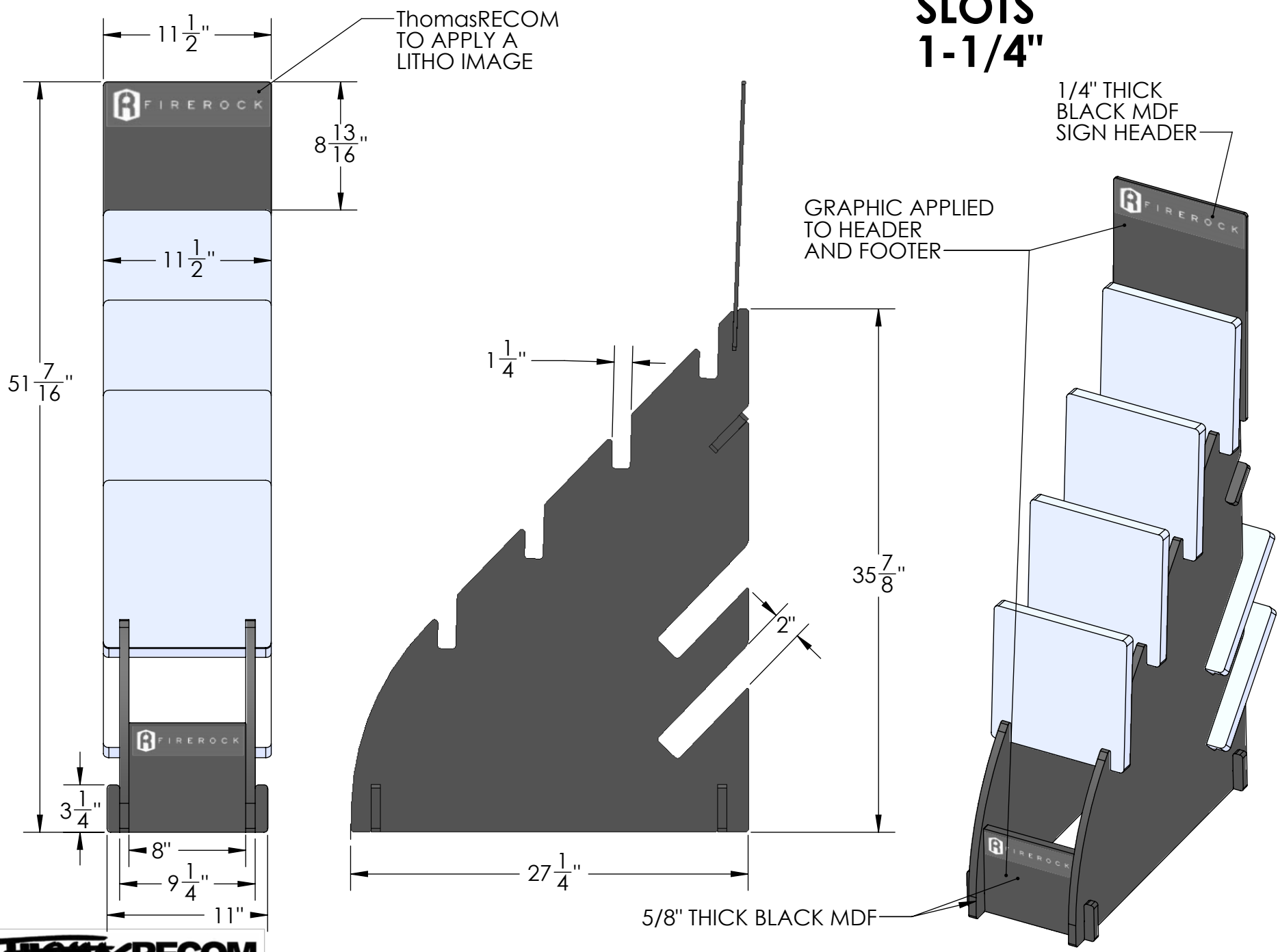

THOMAS RECOM
THE THOMAS RESEARCH COMPANY INC.
1-800-973-2660 WWW.ThomasRECOM.COM

DESC.: 4-COUNT, 1-1/8" SLOTS, WITH HEADER	PART#: 926	DATE: 3-4-19	SHEET 2 OF 2