Back

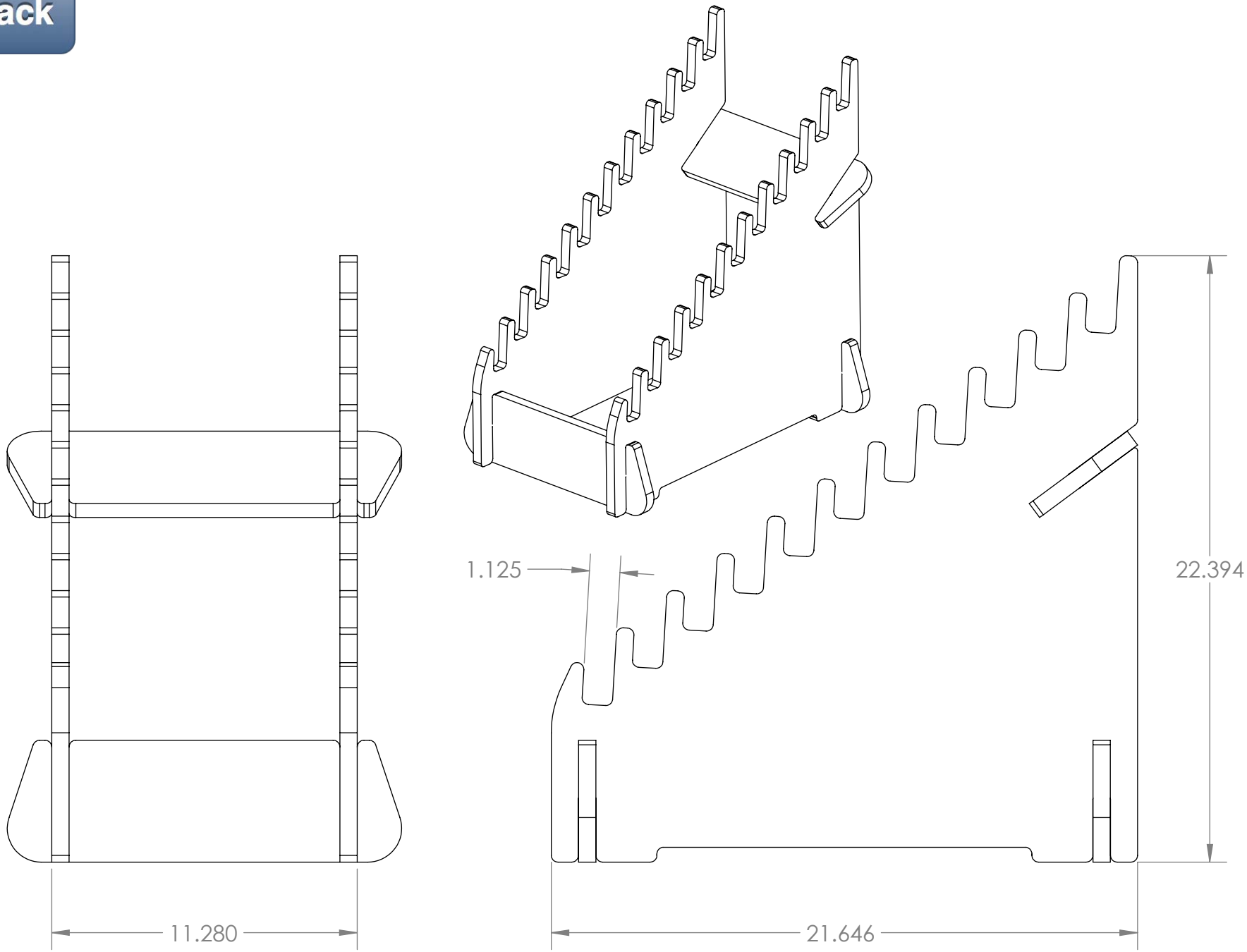

THOMAS RECOM
THE THOMAS RESEARCH COMPANY INC.
1-800-973-2660 WWW.ThomasRECOM.COM

DESC.: 11CFSBLKW118, TRAXTONE	PART#: 866M	DATE: 6-6-18	SHEET 1 OF 1