Back

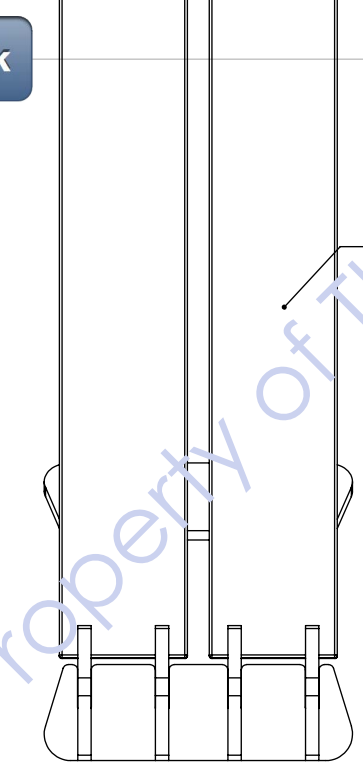

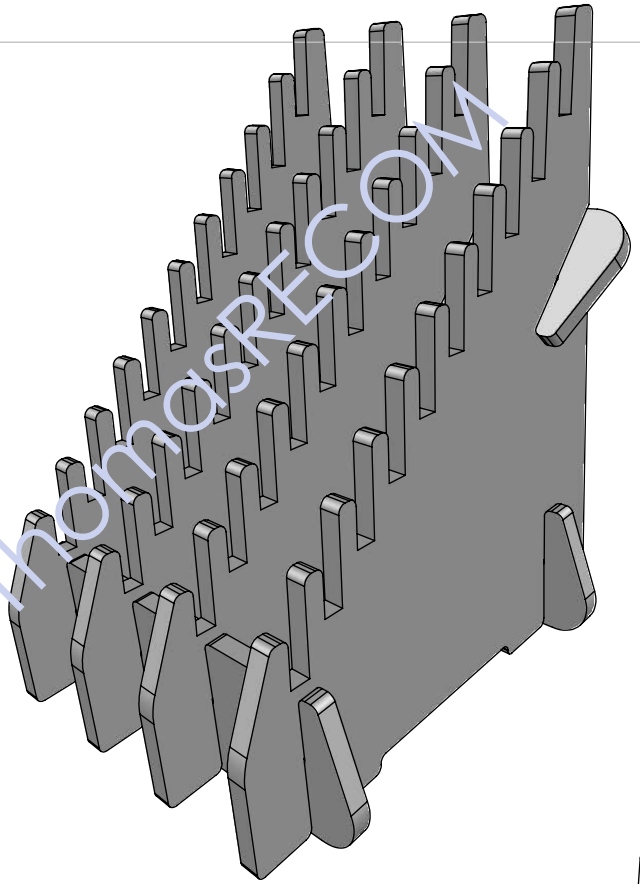

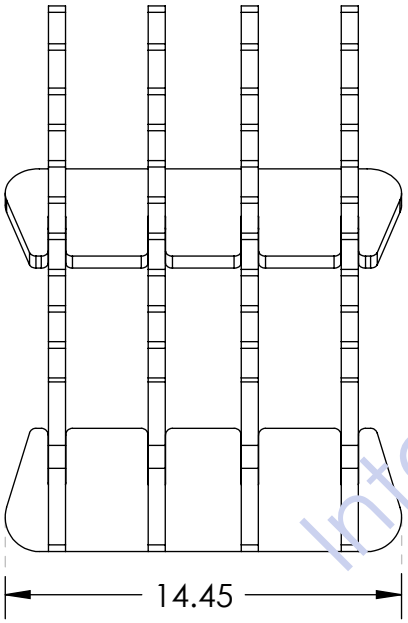

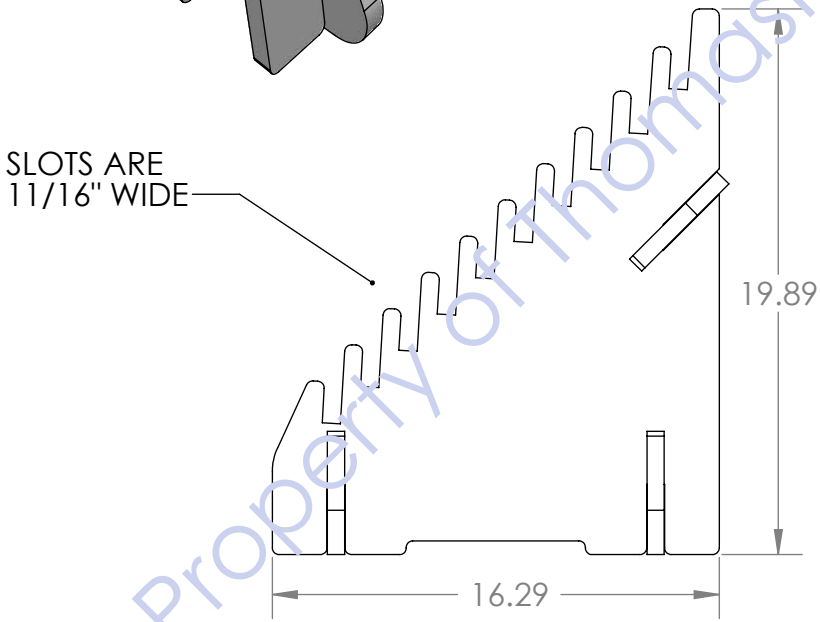

Intellectual Property of ThomasRECOM

THOMAS RECOM THE THOMAS RESEARCH COMPANY INC. 1-800-973-2660 WWW.ThomasRECOM.COM	DESC.: DOUBLE 10 COUNT FINGERSLOT	PART#: 363	DATE: 6/28/2014	SHEET 1 OF 1