Back

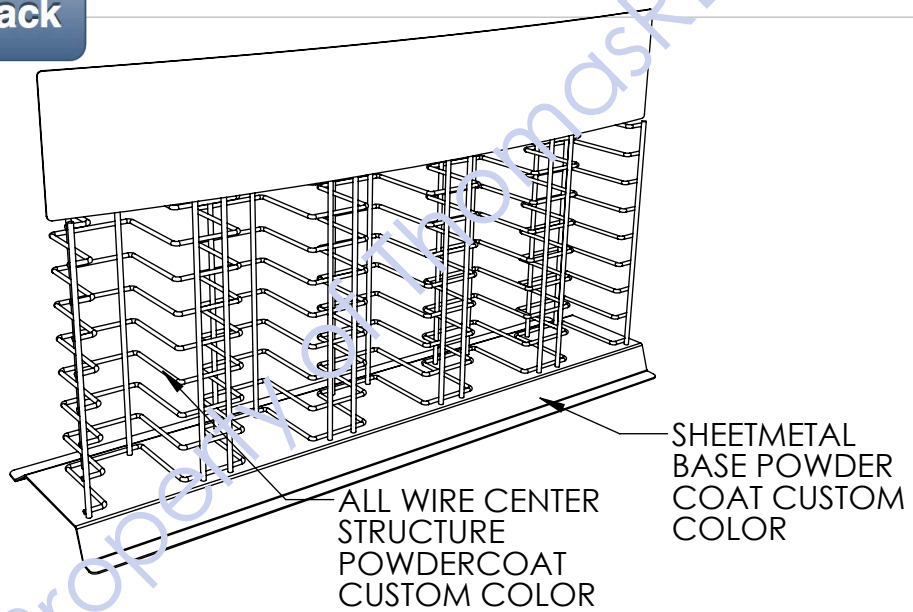

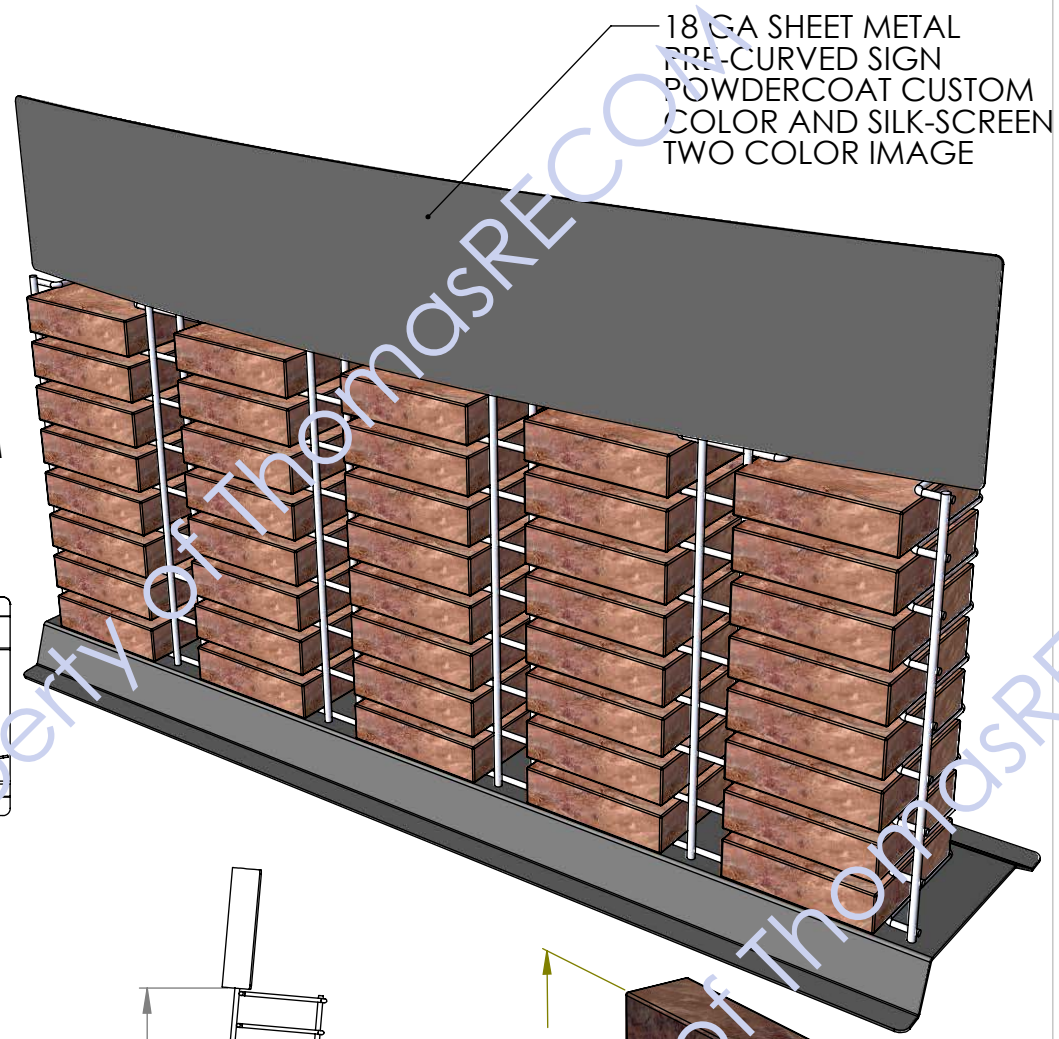

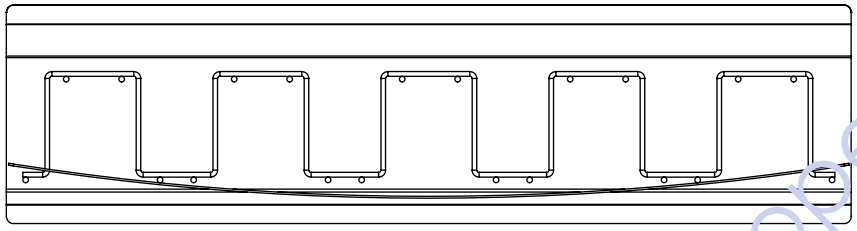

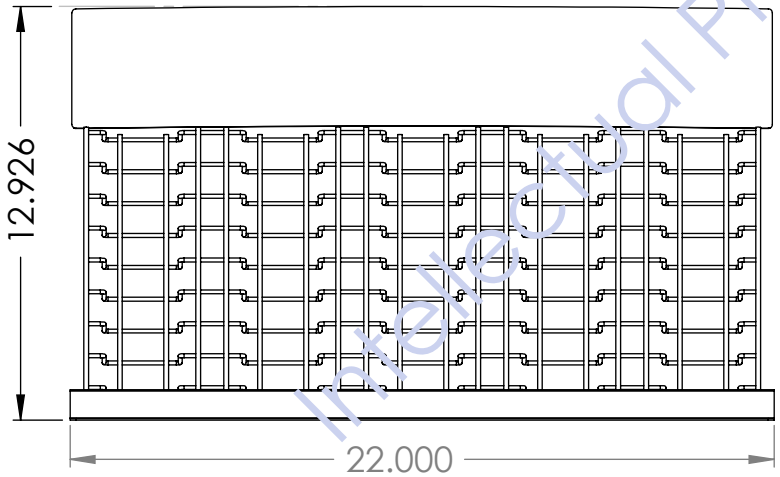

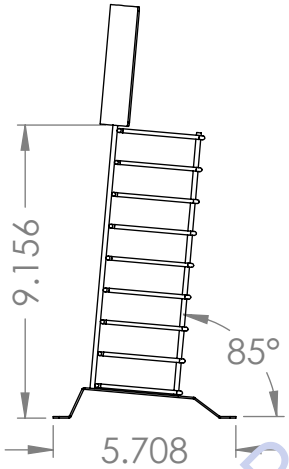

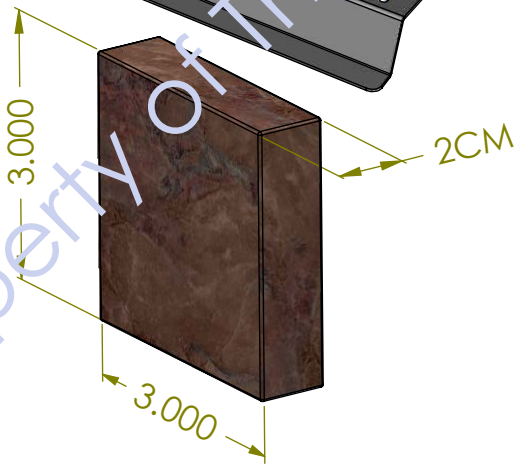

THOMAS RECOM
THE THOMAS RESEARCH COMPANY INC.
1-800-878-2860 SALES@THOMASRECOM.COM WWW.THOMASRECOM.COM

DESC.: 40 COUNT C-TOP WIRE SLAB DISPLAY	PART#: 264	DATE: 10/29/2015	SHEET 1 OF 1

Intellectual Property Of ThomasRECOM