WHITE WITH WHITE PAINTED EDGES

Back

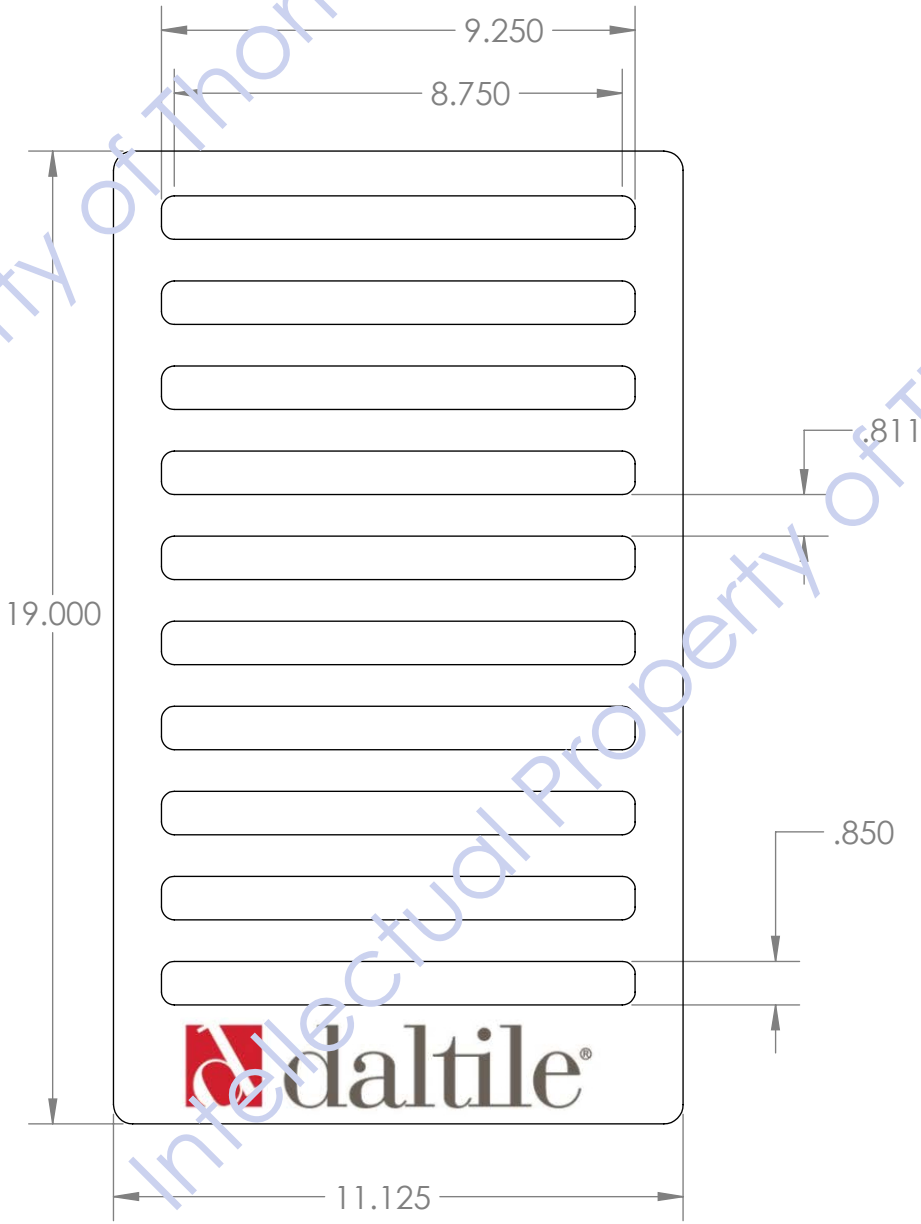

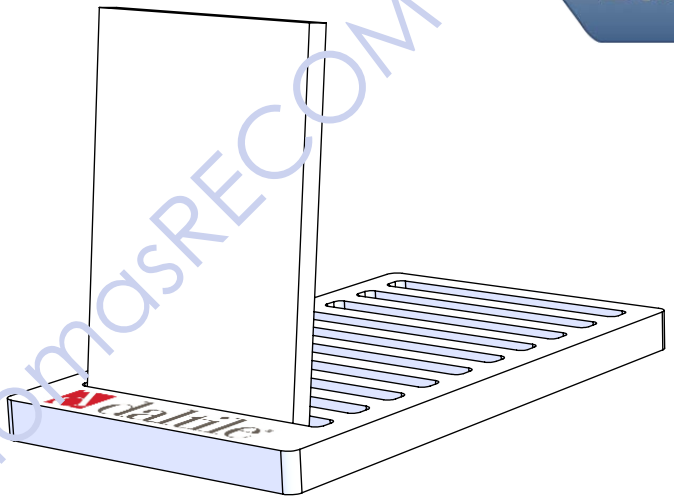

Intellectual Property of ThomasRECOM

THOMAS RECOM
THE THOMAS RESEARCH COMPANY INC.
1-800-973-2660 WWW.ThomasRECOM.COM

DESC.: FLAT SLAB,TABLE TOP,10 SLOTS	PART#: 1633	DATE: 10/10/24	SHEET 1 OF 2

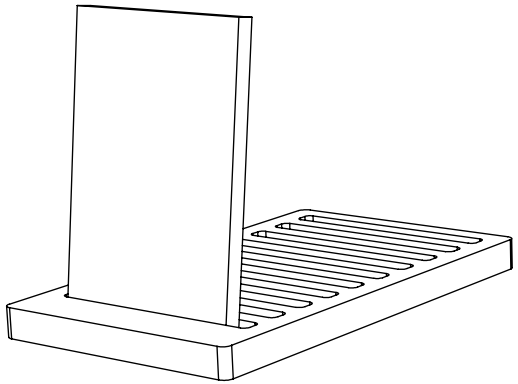

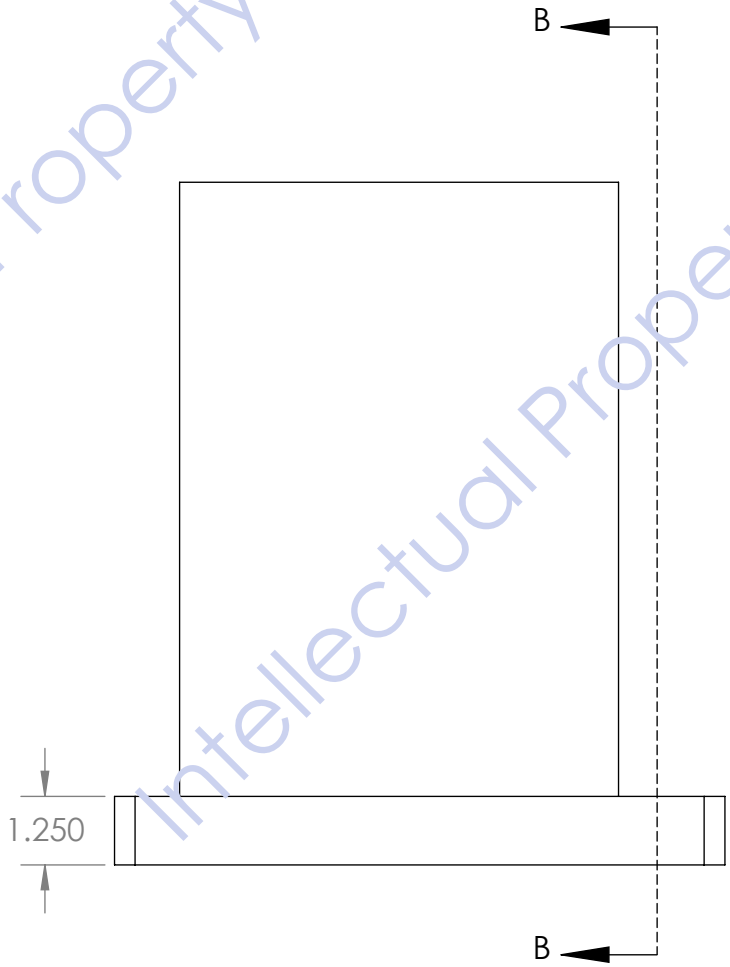

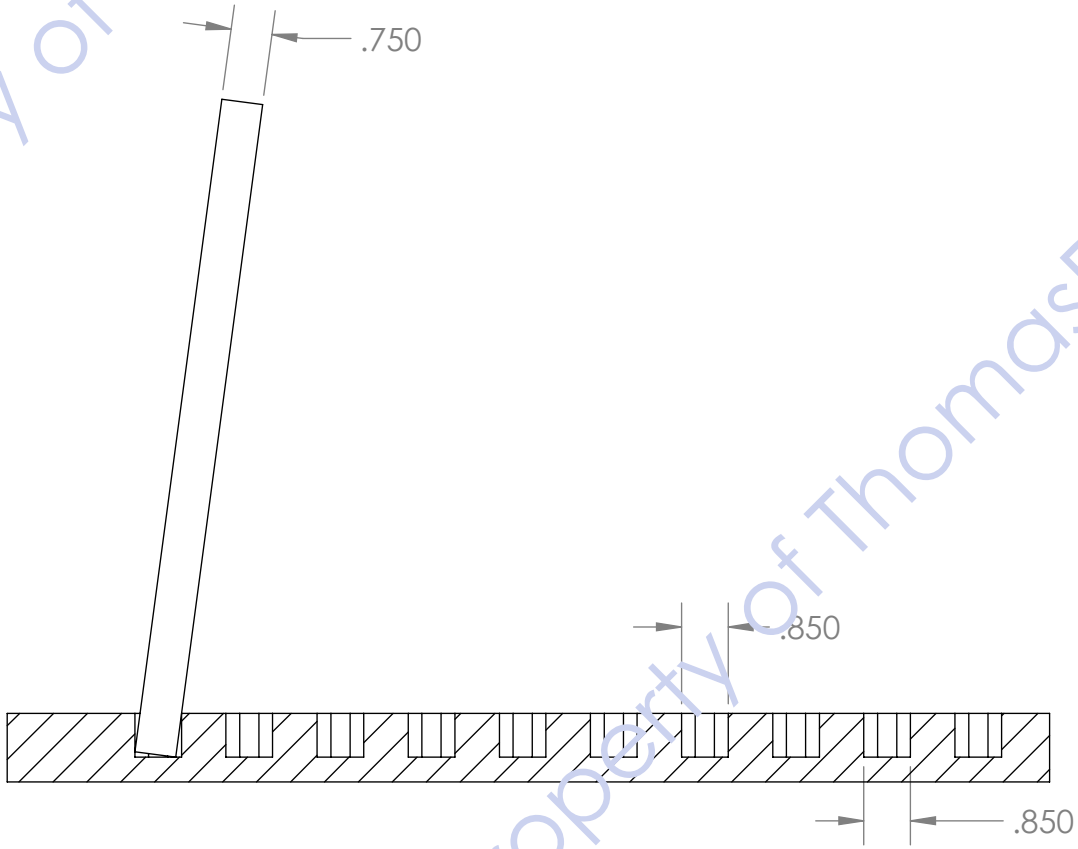

THE THOMAS RESEARCH COMPANY INC.
1-800-973-2660 WWW.ThomasRECOM.COM

DESC.: FLAT SLAB,TABLE TOP,10 SLOTS	PART#: 1633	DATE: 10/10/24	SHEET 2 OF 2

Intellectual Property of ThomasRECOM