Back

Intellectual Property of ThomasRECOM

THOMAS RECOM
THE THOMAS RESEARCH COMPANY INC.
1-800-973-2660 WWW.ThomasRECOM.COM

DESC.: STONE/PAVER EASEL	PART#: 1303	DATE: 6-13-22	SHEET 1 OF 3

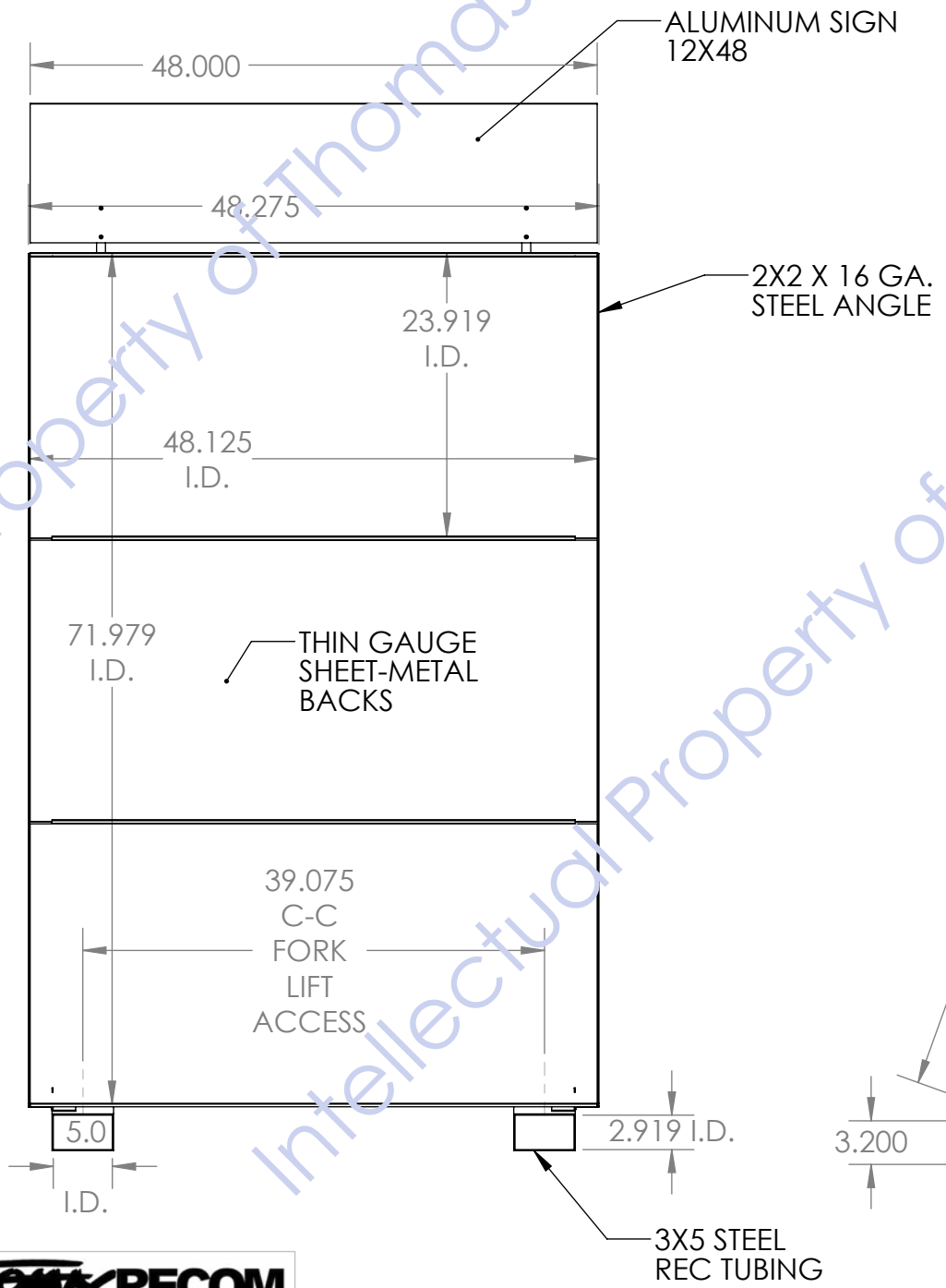

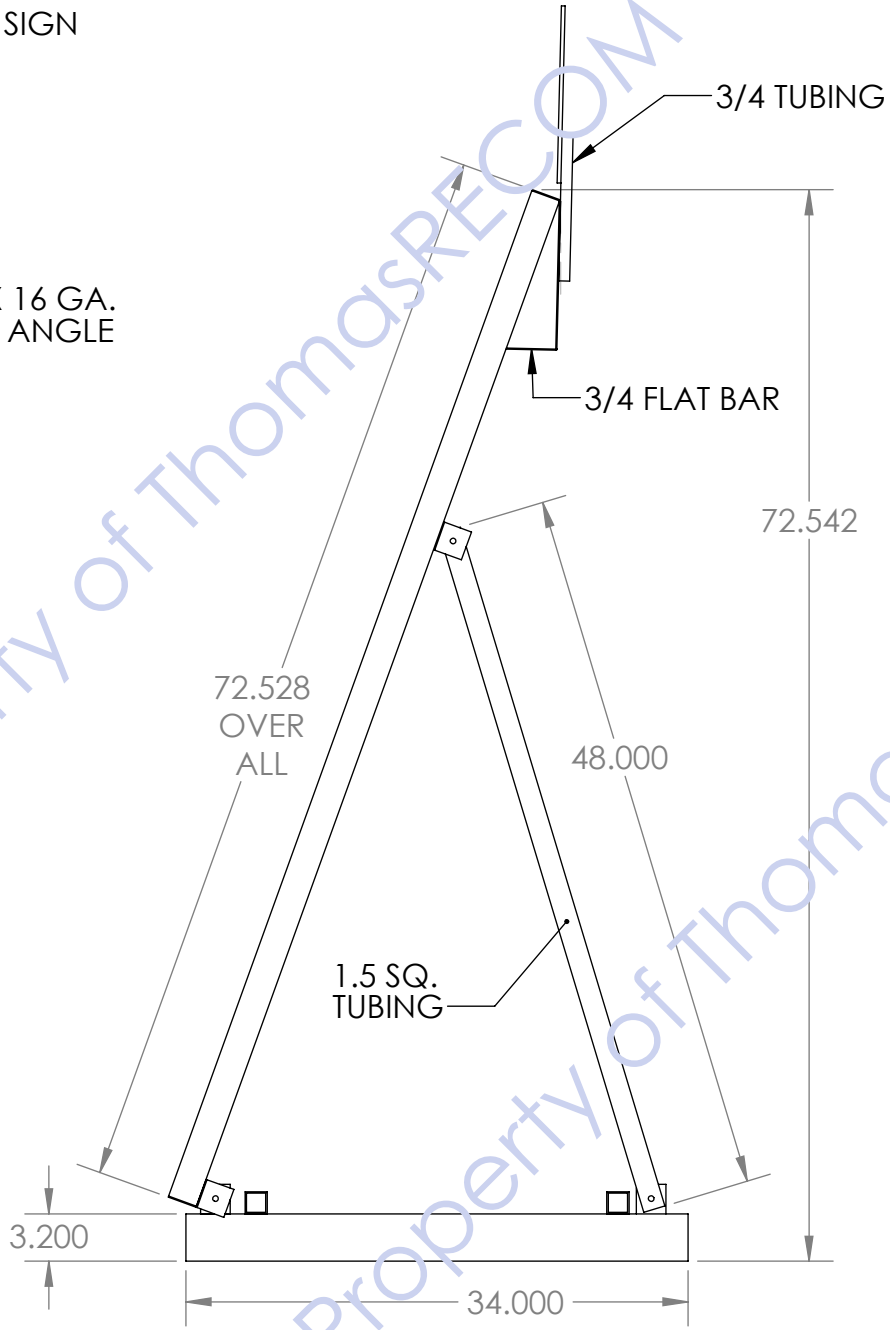

Intellectual Property of ThomasRECOM

THE THOMAS RESEARCH COMPANY INC.
1-800-973-2660 WWW.ThomasRECOM.COM

DESC.: STONE/PAVER EASEL	PART#: 1303	DATE: 6-13-22	SHEET 2 OF 3

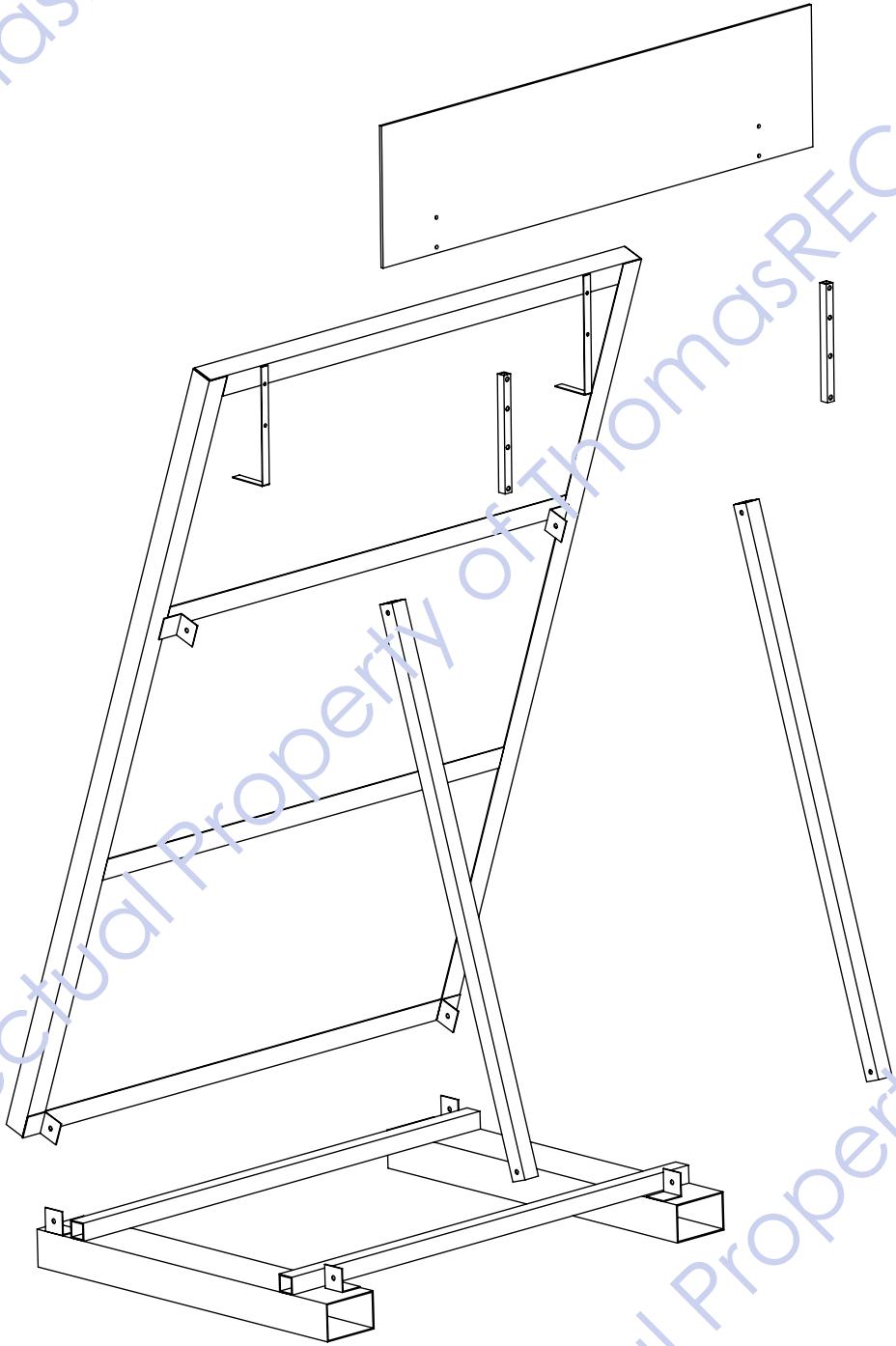

Intellectual Property of ThomasRECOM

THOMAS RECOM THE THOMAS RESEARCH COMPANY INC. 1-800-973-2660 WWW.ThomasRECOM.COM	DESC.: STONE/PAVER EASEL	PART#: 1303	DATE: 6-13-22	SHEET 3 OF 3