Back

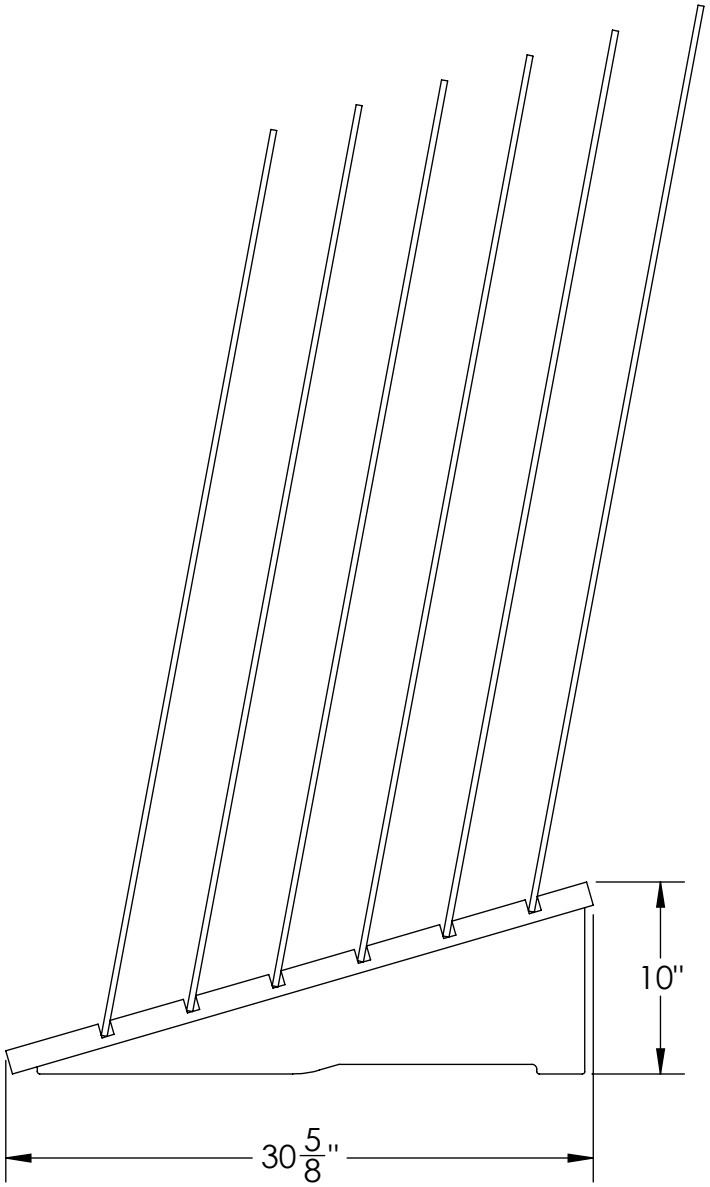

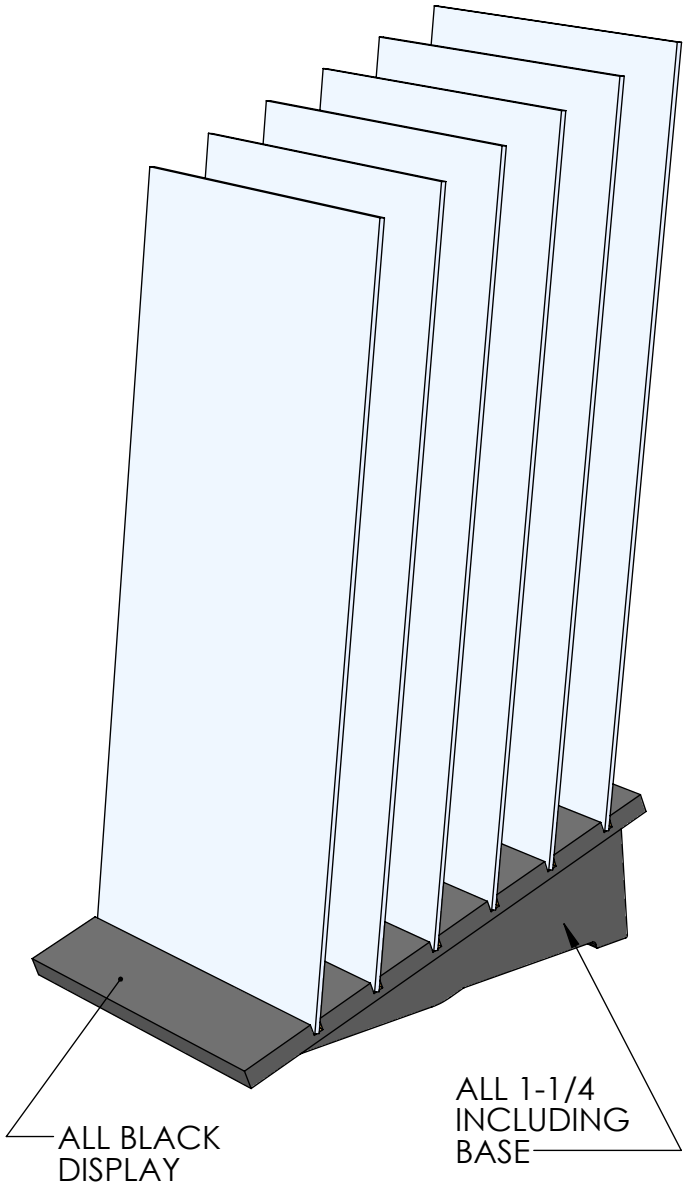

THOMAS RECOM
THE THOMAS RESEARCH COMPANY INC.
1-800-973-2660 WWW.ThomasRECOM.COM

DESC.: 6CRS, 6 COUNT RAMP WEDGE SLAB	PART#: 1272	DATE: 4-4-22	SHEET 1 OF 2

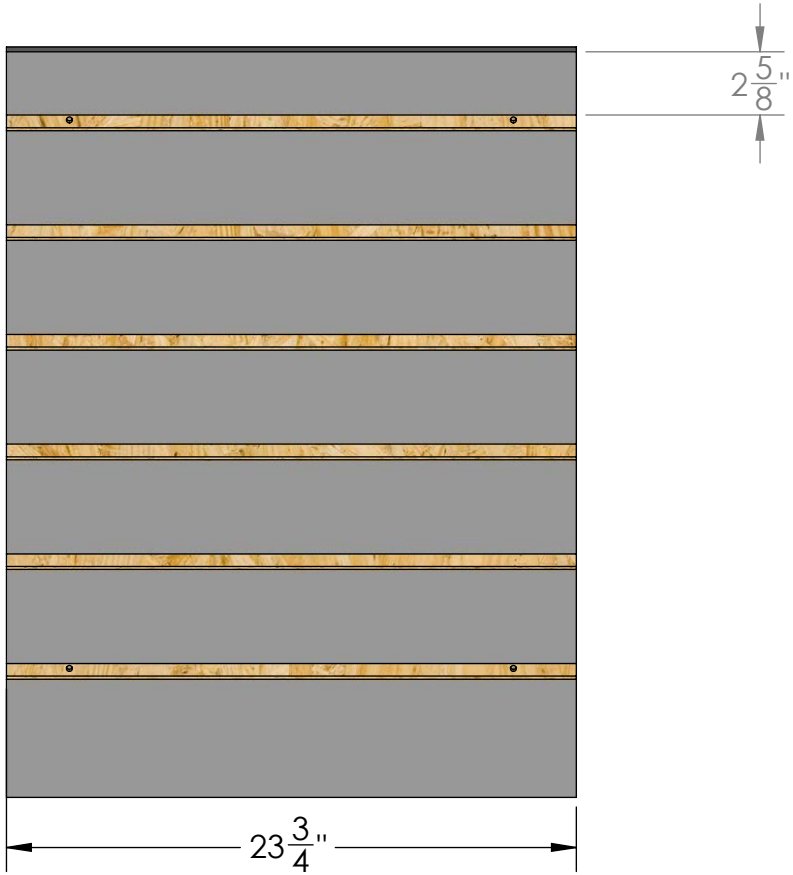

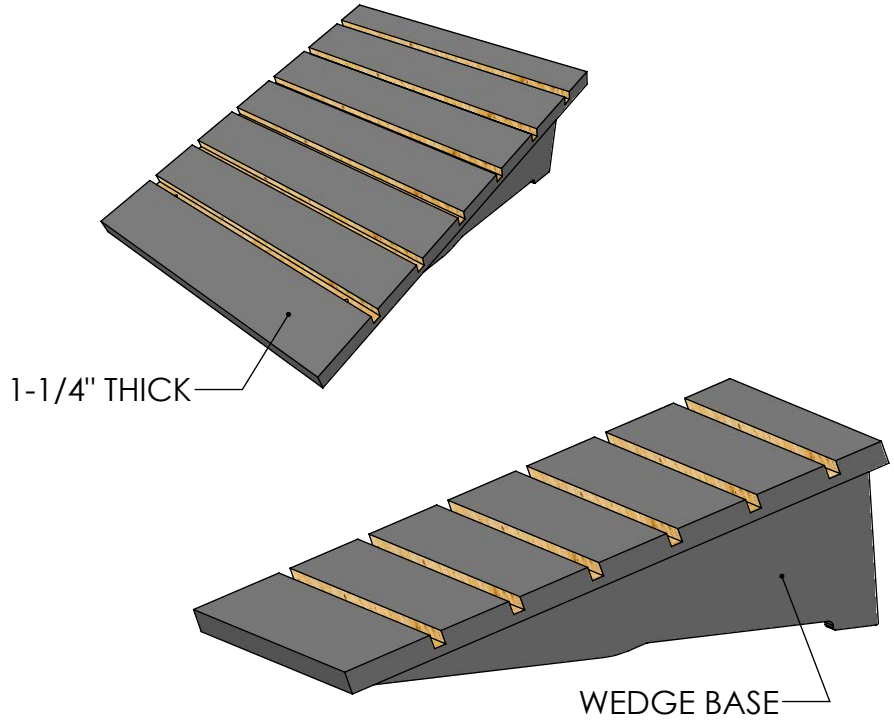

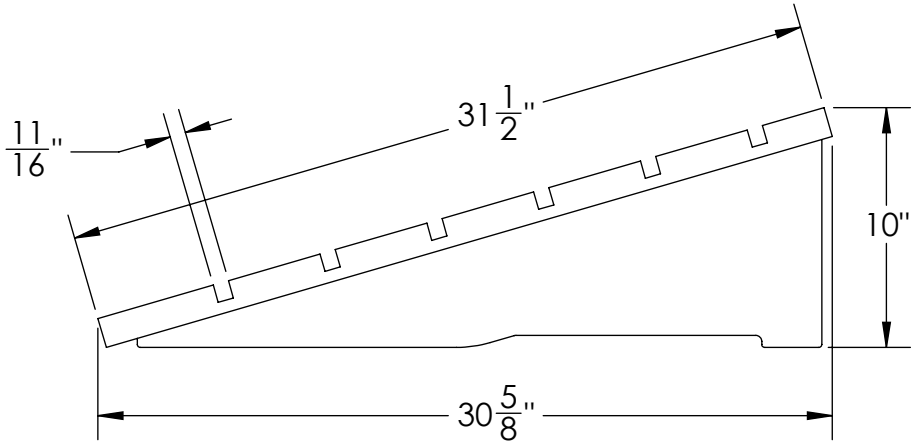

THE THOMAS RESEARCH COMPANY INC.
1-800-973-2660 WWW.ThomasRECOM.COM

DESC.: 6CRS, 6 COUNT RAMP WEDGE SLAB	PART#: 1272	DATE: 4-4-22	SHEET 2 OF 2